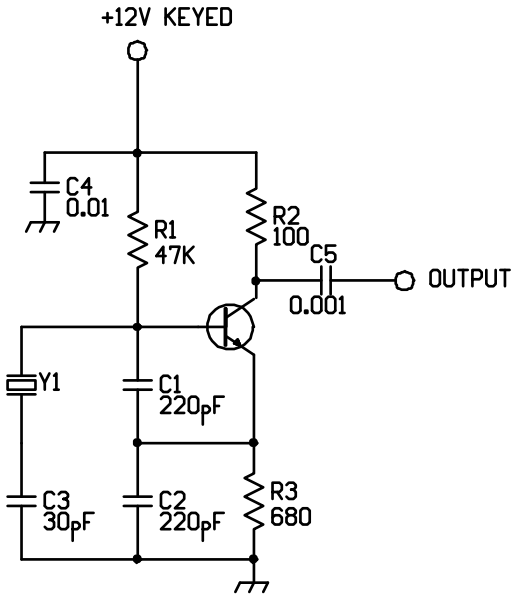
+12V KEYED
C4
0.01
R1
47K
R2
100
C5
0.001
OUTPUT
Y1
C1
220pF
C3
30pF
C2
220pF
R3
680